Service Information

Built-in Oven 6M
AKZM 756/WH

8525 756 53011
Last Modification: 02/08/11
Creation Date: 02/06/11

Spare Part List	**2**
Exploded View	**4**
Technical Data	**5**
Dimensional Sketch	**6**
Wiring Diagram	**7**
Error Codes	**8**
Configuration code	**9**
Service Bulletin 4812 715 40360	**10**

This document is only intended for qualified technicans who are aware of the respective safety regulations.
Subject to modifications

Spare Part List

Pos	12NC	Description
0251	**4801 211 01152**	Profile
0252	**4801 211 01163**	Trim lower
0400	**4801 211 03202**	Hinge
0470	**4801 211 01154**	winge running mechanism
1100	**4801 211 01595**	Door handle
1101	**4812 466 68928**	Buffer piece door handle
1102	**4812 462 48451**	Rubber door handle
1214	**4801 211 01593**	Exhaust fume
1215	**4801 211 01615**	Spacer
1410	**4801 211 02667**	Oven door assembly
1420	**4801 211 01609**	Inner glass
1430	**4801 211 01611**	Door glass
1431	**4801 211 01613**	Support oven glass
1433	**4801 211 02664**	Support oven glass
1910	**4801 211 01444**	Gasket door
2010	**4801 211 02821**	Panel rear
2450	**4801 211 01183**	Oven shelf
2470	**4801 211 03007**	Fat pan enamelled
3200	**4801 211 02861**	Control panel assembly
3201	**4801 211 02715**	Ring push-push
3320	**4801 211 01591**	Push button
3340	**4801 211 02713**	Knob push-push
3342	**4801 211 02859**	Knob push-push
3500	**4810 103 64134**	Display G2 EVO analogue
4400	**4812 361 18492**	Motor fan
4410	**4801 211 01162**	Air cooling fan
4412	**4801 211 01151**	Gasket water leakage
4430	**4819 515 48065**	Fan 6-blades
4520	**4801 211 03613**	Heating element upper/grill 2450W
4560	**4801 211 01147**	Heating element lower 1150W
4800	**4801 211 01172**	Cable harness selector switch-display
4901	**4812 290 68255**	Clamp cable
4902	**4812 321 48026**	Cap feed through
4910	**4812 290 68329**	Connection block
5210	**4801 211 03539**	Control unit Antares
5570	**4801 211 01181**	Thermostat 155°C
6200	**4801 211 02662**	Selector switch 9 position
6201	**4801 211 01146**	Selector switch +/- incremental
6510	**4810 103 91431**	Lamp halogen 40W
6520	**4801 211 01148**	Lamp halogen 40W complete **From: 06/11**
6550	**4801 211 01182**	Switch door assembly
6551	**4801 211 01177**	Screwed joint door switch
6910	**4801 211 01179**	Probe oven temperature
9040	**4801 211 01594**	Spacer glass door
9041	**4801 211 04065**	Damper oven door
9150	**4819 505 18145**	Nut
9227	**4819 532 28281**	Rosette
9622	**4801 211 01167**	Support push-push
9640	**4801 211 02934**	Gasket
9930	**4801 211 01185**	Spacer oven

© Whirlpool EMEA

Pos	12NC	Description
9931	**4801 211 04721**	Kit

Exploded View

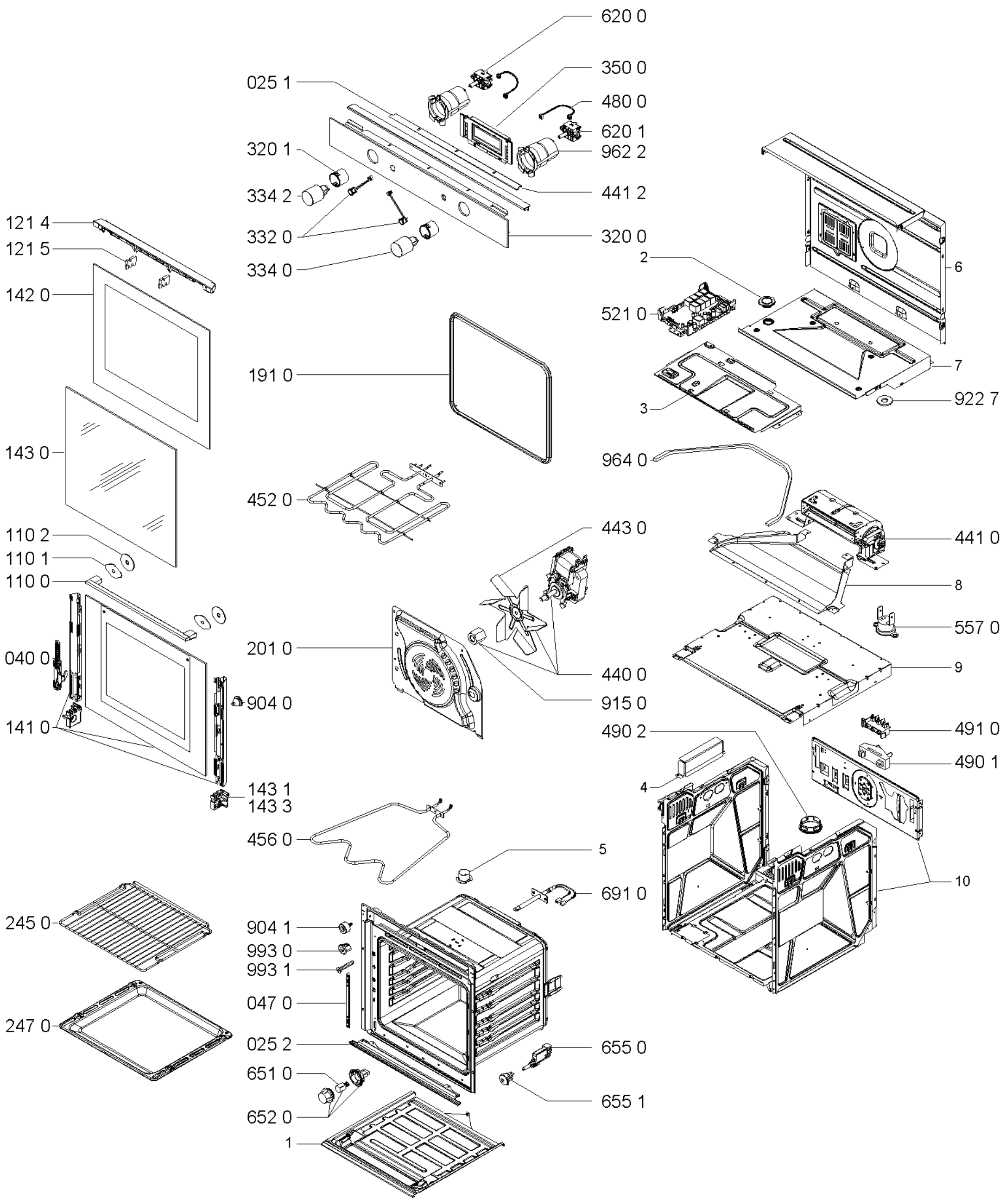

4000 103 72951

Technical Data

Electrical base data

Rated voltage .... 230-240 V~
Main connection .... 230-240 V 1N~50 Hz

Power Consumption

Total connected load .... 2700 W
Upper heating element/Grill .... 2550 W
Lower heating element .... 1200 W

Electrical components

Auto timer .... G2 EVO

Accessories

Fat pan enameled .... 452.5 x 375 mm
Grid chrome .... 451 x 375.2 mm

Dimensional Sketch

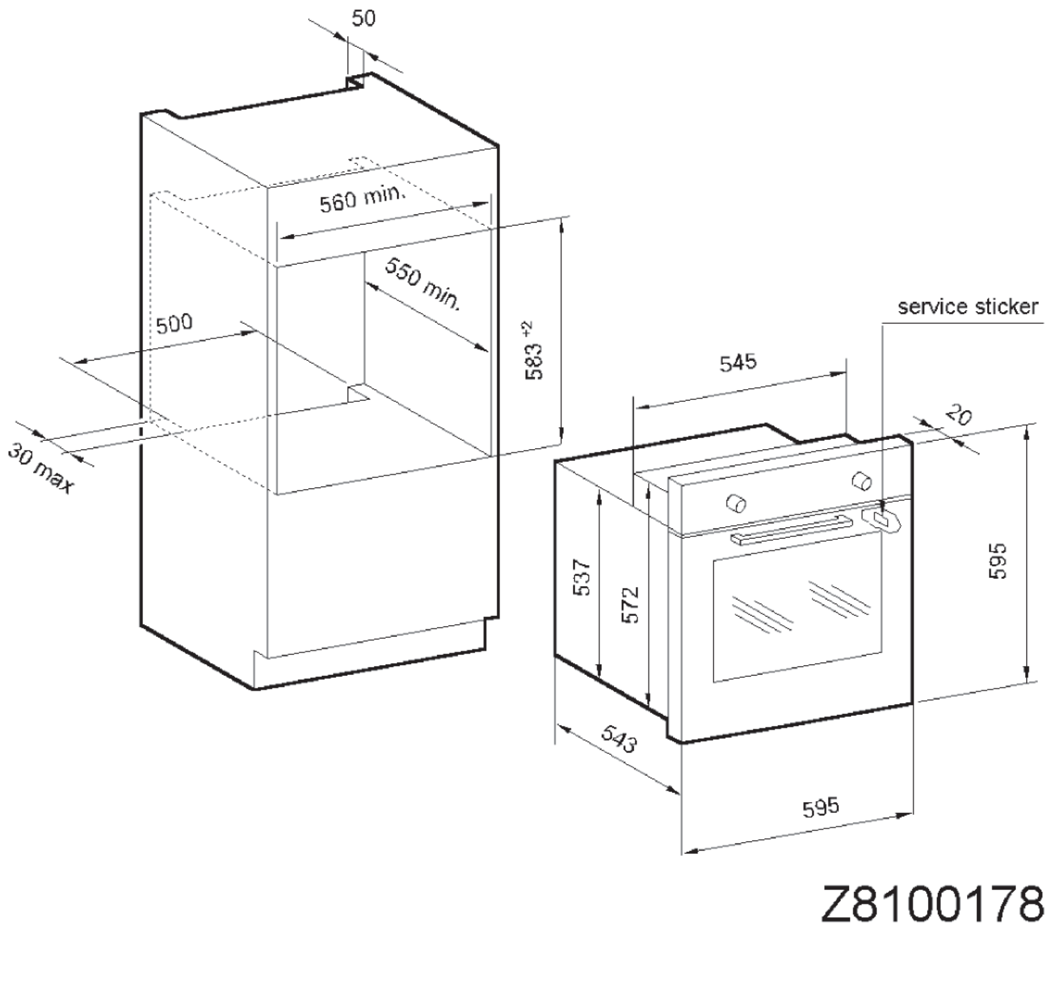

Z8100178

Wiring Diagram

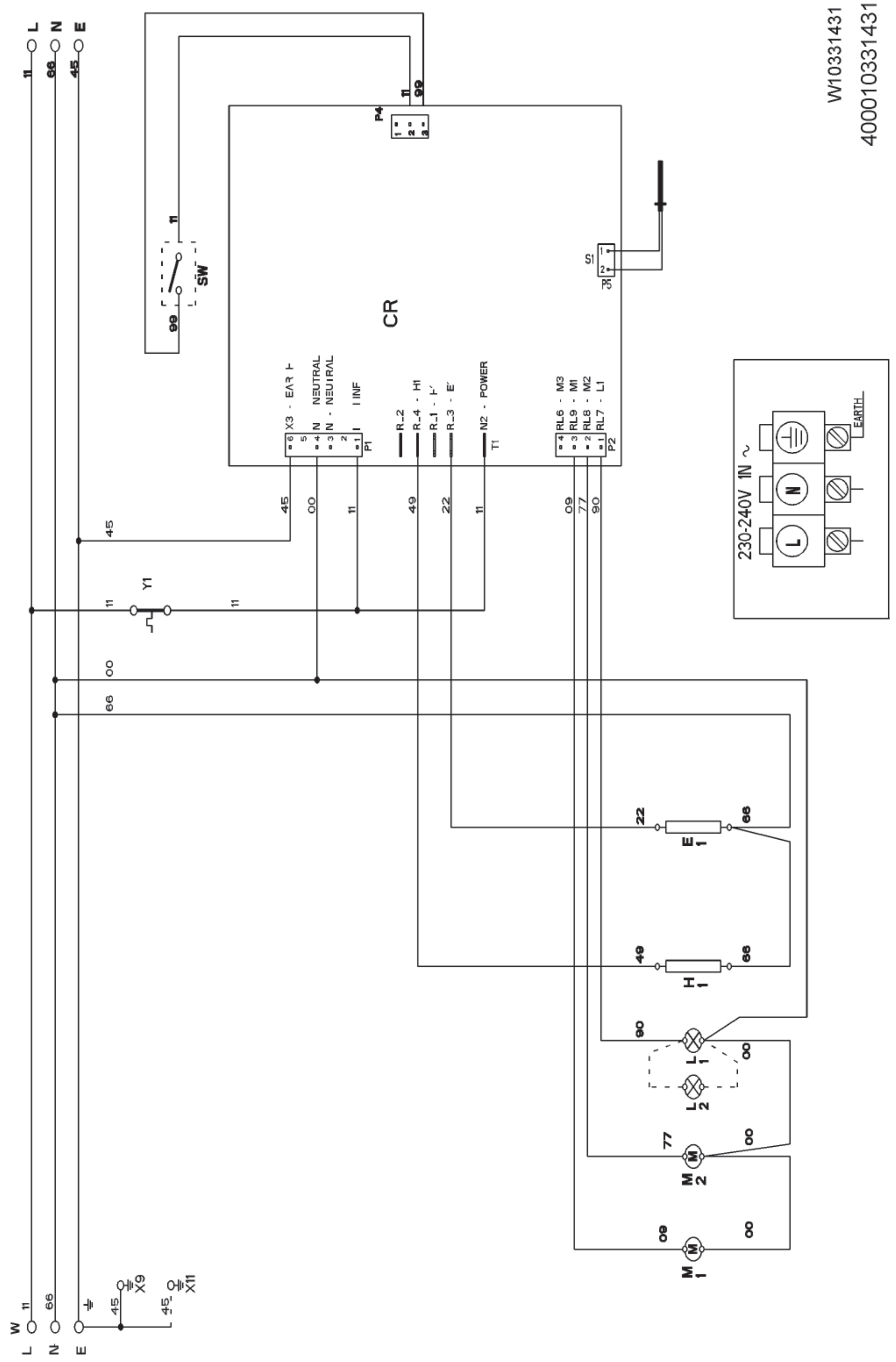

Error Codes

Product Type	Failure Code	Failure Type	Test
All	F01	Temperature Probe	First check probe connection, if ok disconnect the probe and measure its resistance (1000Ω+3.75*Temp ambient). If value is in range change Antares / Capricorn.
All	F02	Temperature Error	Check heating elements insulation (disconnect each heating element and check each terminal for continuity to GROUND). If there is no continuity change Antares / Capricorn.
All	F03	A.M. EEPROM	Replace Capricorn or if applicable reprogram Antares EEPROM using SAM. If the problem persists change Antares.
Capricorn Only	F04	W.I.S.P. Protocol	First check connection between Capricorn and Scales. If connection is ok connect a new Capricorn to the Scales and check if the appliance works correctly. Otherwise change Scales.
Vega	F04	WIDE Communication Error	Check the connection between RX/TX and J005 on the Antares then test in the same way as F07.
Pyro	F05	Door Latch	First unplug the appliance, wait at least 10sec then reconnect. Verify that latch system works correctly (door has to be closed, motor has to run). If this happens, check the connection between Antares and door latch system. If it is ok check micro switch functionality (door switch open if the door is open and latch switch open if the door is unlocked). If switches are ok then change Antares.
Pyro	F06	Door Closure	First check connection between Antares and door latch system. If it is ok check door switch functionality (open circuit if the door is open, closed circuit if the door is closed). If switch is ok then change Antares.
All	F07	Communication UI/AM	First check connection between Antares / Capricorn & User Interface. If connection is ok connect a new User Interface to the Antares / Capricorn and check if the appliance works correctly. In this case change the User Interface on the appliance. Otherwise change the Antares / Capricorn.
TAD/ Vega	F08	UI EEPROM	Change User Interface.
TAD	F09	Communication G2SMART/Antares	First check connection between Antares & User Interface. If connection is ok connect a new G2SMART to the Antares and check if the appliance works correctly. In this case change the G2SMART on the appliance. Otherwise change the Antares.
Pyro	F10	Primary grill	First check grill connections. If it is ok disconnected the heating element and check the resistance between the terminals (approx. 22Ω ±3Ω). If the value is in range change Antares.
TAD/ Vega	F11	Communication UI/Display	First check connection between User Interface and Display. If connection is ok connect a new Display to the User Interface and check if the appliance works correctly. Otherwise change User Interface.

81002764

© Whirlpool EMEA

Configuration code

.... GE00-AN09

Service Bulletin 4812 715 40360

AUTHOR: Robert Svecak
Last Update: 12/01/10
VERSION: 1.0
TITLE: Push button issue on Minerva ovens
SUBJECT: Redesign of fixing hooks and extension of the button body ensures correct functionality of the push buttons.

REMEDIAL ACTION

Exchange both push buttons(left&right) with 12NC 4801 211 01591.

The new design has been introduced in production from 04.10.2010 onwards.
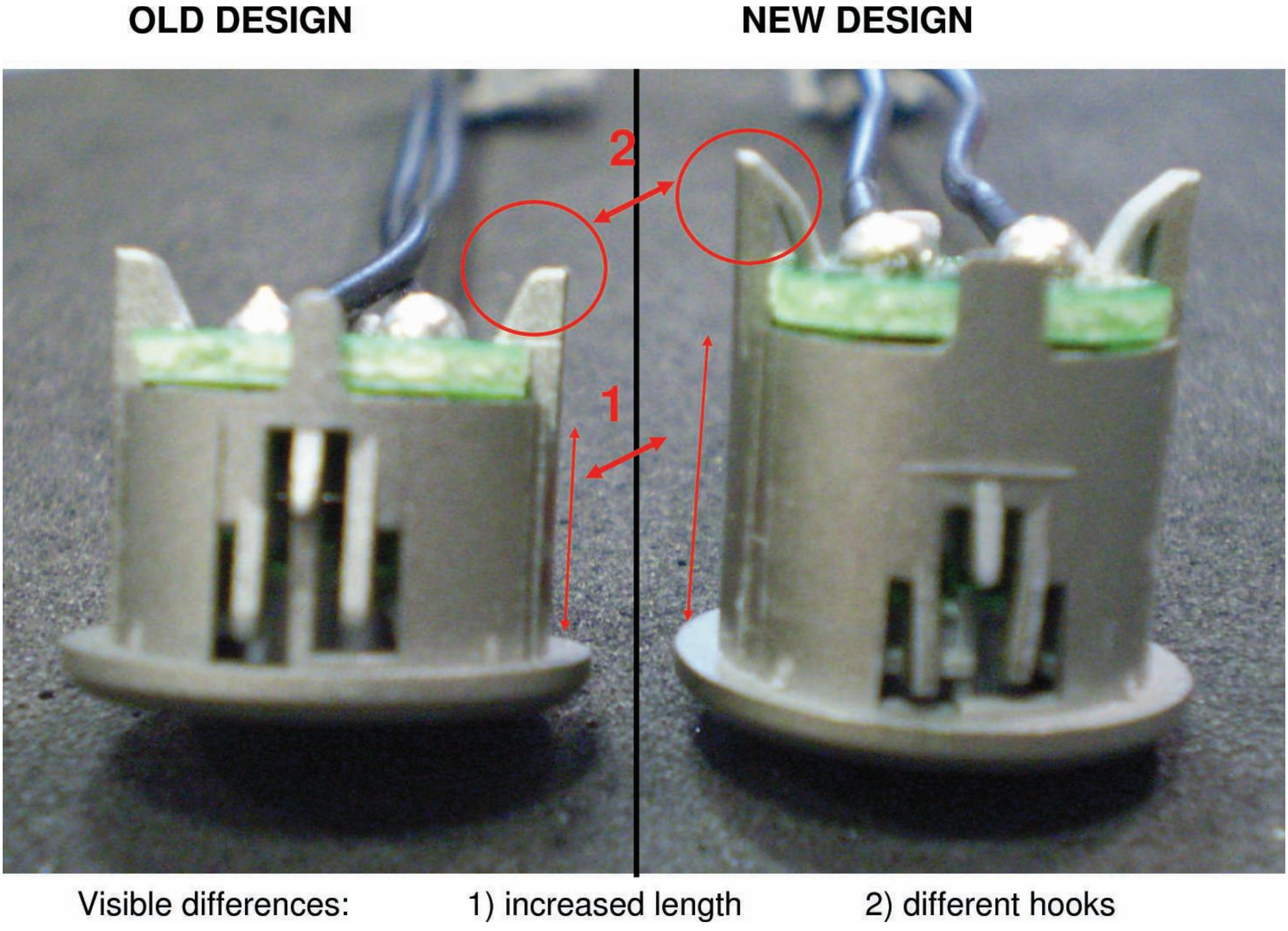
SPC stock was revised on 11.10.2010.